Clay County, Missouri
Land Survey Document

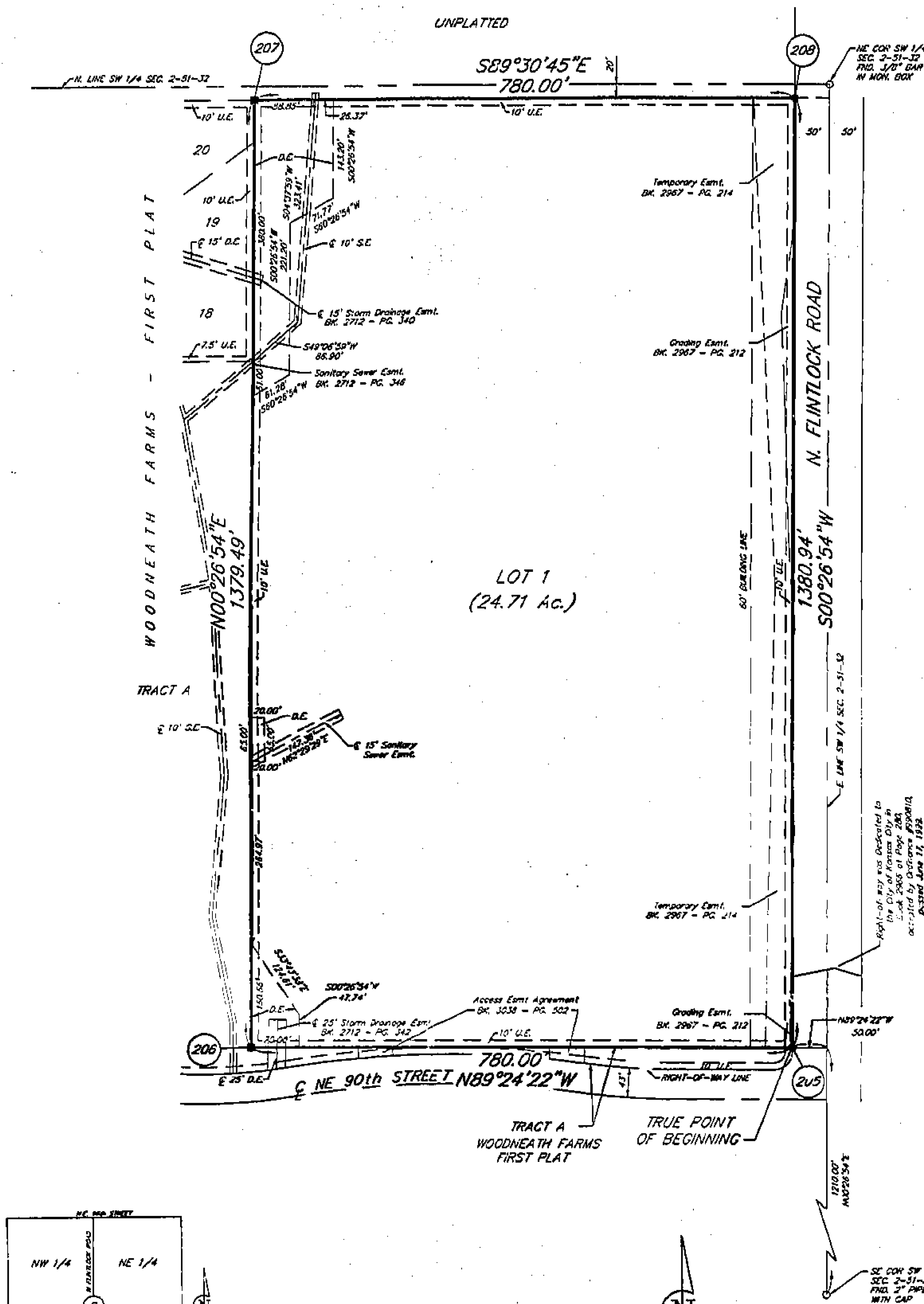

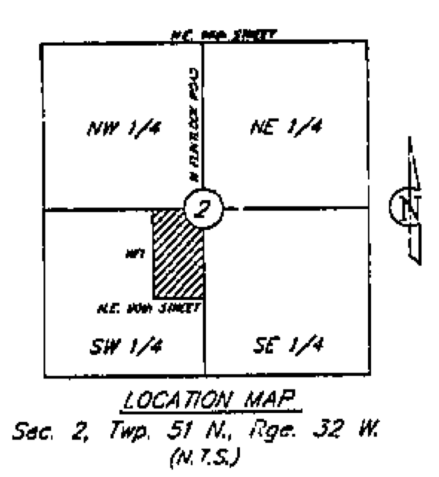

LEGEND

■ - FND 5/8" Bar
● - 5/8" Bar with Aluminum Cap to be set upon completion of construction
U.E. - Utility Easement
B.L. - Building Line
D.E. - Storm Drainage Easement
S.E. - Sanitary Sewer Easement

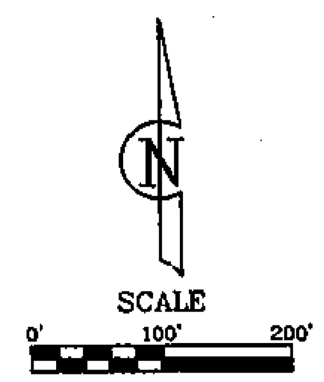

0 24672

NOV 2 9 2000

FLINTLOCK ELEMENTARY SCHOOL

A SUBDIVISION IN KANSAS CITY, CLAY COUNTY, MISSOURI

LEGAL DESCRIPTION:

A subdivision of land in the Southwest Quarter of Section 2, Township 51, Range 32, Kansas City, Clay County, Missouri, being bounded and described as follows: Commencing at the Southeast corner of said Southwest Quarter, thence North 0°26'54" East, along the East line of said Southwest Quarter, 1210.00 feet; thence North 89°24'22" West, parallel with the South line of said Southwest Quarter, 50.00 feet to the True Point of Beginning of the tract to be herein described; thence continuing North 89°24'22" West, 780.00 feet; thence North 0°26'54" East, 1379.49 feet; thence South 89°30'45" East, 20.00 feet South of and parallel with the North line of said Southwest Quarter, 780.00 feet; thence South 0°26'54" West, 50.00 feet West of and parallel with the East line of said Southwest Quarter, 1380.94 feet to the True Point of Beginning. Containing 24.71 acres, more or less.

DEDICATION

The undersigned owners of the above described tract of land have caused the same to be subdivided in the manner as shown on the accompanying plat, which subdivision and plat shall hereafter be known as:

FLINTLOCK ELEMENTARY SCHOOL

EASEMENTS: An easement is hereby granted to Kansas City, Missouri, for the purpose of locating, constructing, operating, and maintaining facilities for water, gas, electricity, sewage, telephone, cable TV, and surface drainage, including, but not limited to, underground pipes and conduits, pad mounted transformers, service pedestals, any or all of them upon, over, under and along the strips of land designated utility easement (U.E.). Where other easements are designated for a particular purpose, the use thereof shall be limited to that purpose only. All of the above easements shall be kept free from any and all obstructions which would interfere with the construction or reconstruction and proper, safe and continuous maintenance of the aforesaid uses and specifically there shall not be built thereon or thereover any structure (except driveways, paved areas, grass, shrubs and fences) nor shall there be any obstruction to interfere with the agents and employees of Kansas City, Missouri, and its franchised utilities from going upon said easement and as much of the adjoining lands as may be reasonably necessary in exercising the rights granted by the easement. No excavation or fill shall be made or operation of any kind or nature shall be performed which will reduce or increase the earth coverage over the utilities above stated or the appurtenances thereto without the written approval of the Director of Public Works as to utility easements and/or the Director of Water Services as to water main easements.

BUILDING LINES: Building lines or setback lines are hereby established as shown on the accompanying plat and no buildings or portion thereof shall be built between this line and the street line.

RIGHT OF ENTRANCE: The right of ingress and egress and travel along any street or drive within the boundaries of the property is hereby granted to Kansas City, Missouri for the purpose of fire and police protection, maintenance of water mains, sanitary and storm sewer lines, collection of garbage and refuse and to the United States Postal Services for the delivery of mail; provided, however, such right of ingress and egress does not include any obligation to contribute for any damage to any private street or drive by virtue of the exercise of the rights stated herein and specifically, neither Kansas City, Missouri, nor the United States Postal Service shall incur any liability by virtue of the exercise of such rights. The right of ingress and egress is also hereby granted to the public for access to adjacent property through areas marked Access Easement or "A.E."

CITY PLAN COMMISSION

Approved ________

Chairman - Charles F. Myers

Asst. Secretary - Virginia L. Walsh

PUBLIC WORKS

Approved ________

City Engineer - Stanley J. Harris, P.E.

Director - George E. Wolf, Jr., P.E.

000225
Entry Number

COUNCIL

This is to Certify that the within plat was duly submitted to and approved by the Council of Kansas City, Missouri, by Ordinance No. 001453 duly authenticated as passed this 19 day of Oct., 2000.

Mayor - Kay Barnes

City Clerk - Catherine T. Rocha

IN WITNESS WHEREOF: LIBERTY PUBLIC SCHOOL DISTRICT #53, a political subdivision of the State of Missouri, has caused these presents to be executed this 21st day of July, 2000.

LIBERTY PUBLIC SCHOOL DISTRICT #53

~~Kim Amick~~ Dr. Kent Peach — ~~Board President~~ Asst. Superintendent

Missouri Acknowledgment-School District

STATE OF Missouri)
) SS:
COUNTY OF Clay)

Be it remembered that on this 21st day of July, 2000, before me, the undersigned, a Notary Public, personally appeared ~~Kim Amick~~ Dr. Kent Peach to me known to be the person who executed the foregoing instrument on behalf of Liberty Public School District #53, a political subdivision of the State of Missouri, and the said person last named acknowledged that she executed the same as her free act and deed on behalf of Liberty Public School District #53 for the purposes therein stated.

IN WITNESS WHEREOF: I have hereunto set my hand and affixed my Notarial Seal on the date herein last above written.

Notary Public

My Commission Expires: Heddie S. Loger, Notary Public, Clay County, State of Missouri, My Commission Expires 1-5-2002

FLINTLOCK ELEMENTARY SCHOOL

RECOMMENDED STREET GRADES

GRADE POINT		ELEV.	V.C.T.
N. FLINTLOCK ROAD			
3705.73	Feet North of the Centerline of MO HWY 152	182.35	———
3965.73	Feet North of the Centerline of MO HWY 152	184.85	250.00'
4830.73	Feet North of the Centerline of MO HWY 152	211.10	100.00'
5289.20	Feet North of the Centerline of MO HWY 152	239.60	360.00'
5649.20	Feet North of the Centerline of MO HWY 152	218.00	———

Street Grades for NE 90th Street were previously established by Ordinance No. 980164, passed on February 23, 1998.

STATE PLANE TRAVERSE TABLE

Station	Bearing	Dist. (Grid Meters)	Northing	Easting
200 CLAY			341588.667	853732.673
201	S89°45'03"W	726.887	341586.705	853005.797
202	N03°09'08"W	190.211	341786.627	852995.337
203 SE Cor SW 1/4	N0°38'56"E	654.231	342440.816	853002.748
204	N0°26'54"E	368.774	342809.579	853005.631
205 TPOB	N89°24'22"W	15.239	342809.737	852990.394
206	N89°24'22"W	237.722	342812.202	852752.684
207	N00°26'54"E	420.429	343232.618	852755.974
208	S89°30'45"E	237.722	343230.687	852993.687
205 TPOB	S00°26'54"W	420.871	342808.737	852990.394

NOTE: ALL BEARINGS AND COORDINATES SHOWN ARE BASED ON THE MISSOURI STATE PLANE GRID SYSTEM, NAD 1983, WEST ZONE, USING A COMBINED GRID FACTOR OF 0.9999032. COORDINATES ARE IN METERS.

This plat and survey of **FLINTLOCK ELEMENTARY SCHOOL** were executed by John F. Lutjen & Associates, Inc., 8350 N. St. Clair Avenue, Kansas City, Missouri 64151.

I HEREBY CERTIFY: that the plat of **FLINTLOCK ELEMENTARY SCHOOL** subdivision is based on an actual survey made by me or under my direct supervision and that said survey meets or exceeds the current Missouri Minimum Standards for Property Boundary Surveys as established by the Missouri Board for Architects, Professional Engineers and Land Surveyors and the Missouri Department of Natural Resources. I further certify that I have complied with all statutes, ordinances and regulations governing the practice of surveying and platting of subdivisions to the best of my professional knowledge and belief.

7-20-00
Date

Sign: W. James Schowe RLS #1889

John F. Lutjen & ASSOCIATES, INC.
Civil Engineers - Land Surveyors
Landscape Architects
8350 N. St. Clair Ave.
Kansas City, Missouri 64151
Phone: 816-587-4320
Fax: 816-587-1393

DATE: 7-19-00	Job No.-9K293A	File Name-SCHOOL-P

http://www.ClayCoGov.com